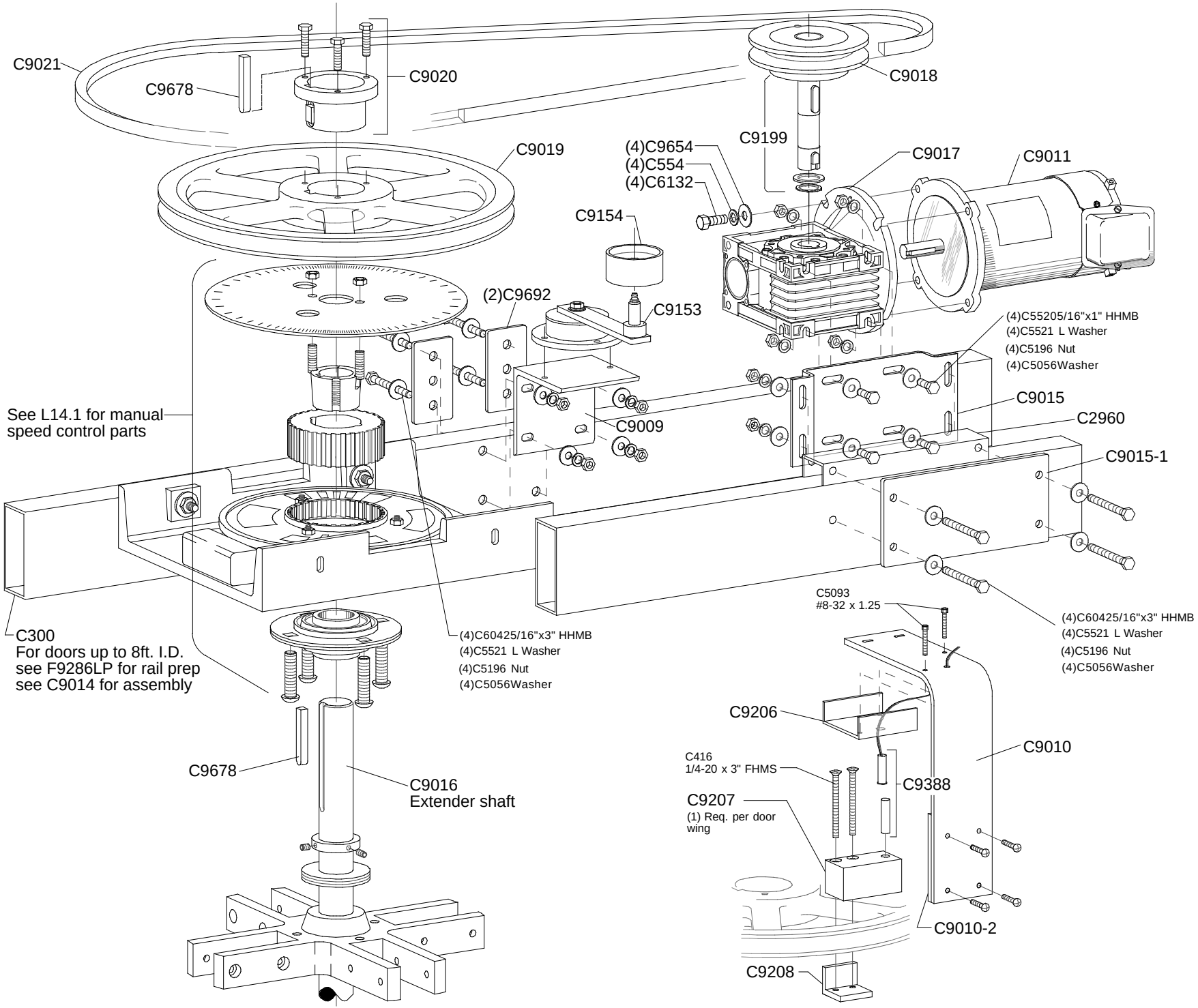
C9021
C9678
C9020
C9018
C9199
C9019
(4)C9654
(4)C554
(4)C6132
C9017
C9011
C9154
(2)C9692
C9153
(4)C55205/16"x1" HHMB
(4)C5521 L Washer
(4)C5196 Nut
(4)C5056Washer
C9015
C2960
C9015-1
See L14.1 for manual speed control parts
C9009
C300
For doors up to 8ft. I.D.
see F9286LP for rail prep
see C9014 for assembly
(4)C60425/16"x3" HHMB
(4)C5521 L Washer
(4)C5196 Nut
(4)C5056Washer
C5093
#8-32 x 1.25
(4)C60425/16"x3" HHMB
(4)C5521 L Washer
(4)C5196 Nut
(4)C5056Washer
C9206
C9010
C416
1/4-20 x 3" FHMS
C9388
C9678
C9016
Extender shaft
C9207
(1) Req. per door wing
C9010-2
C9208