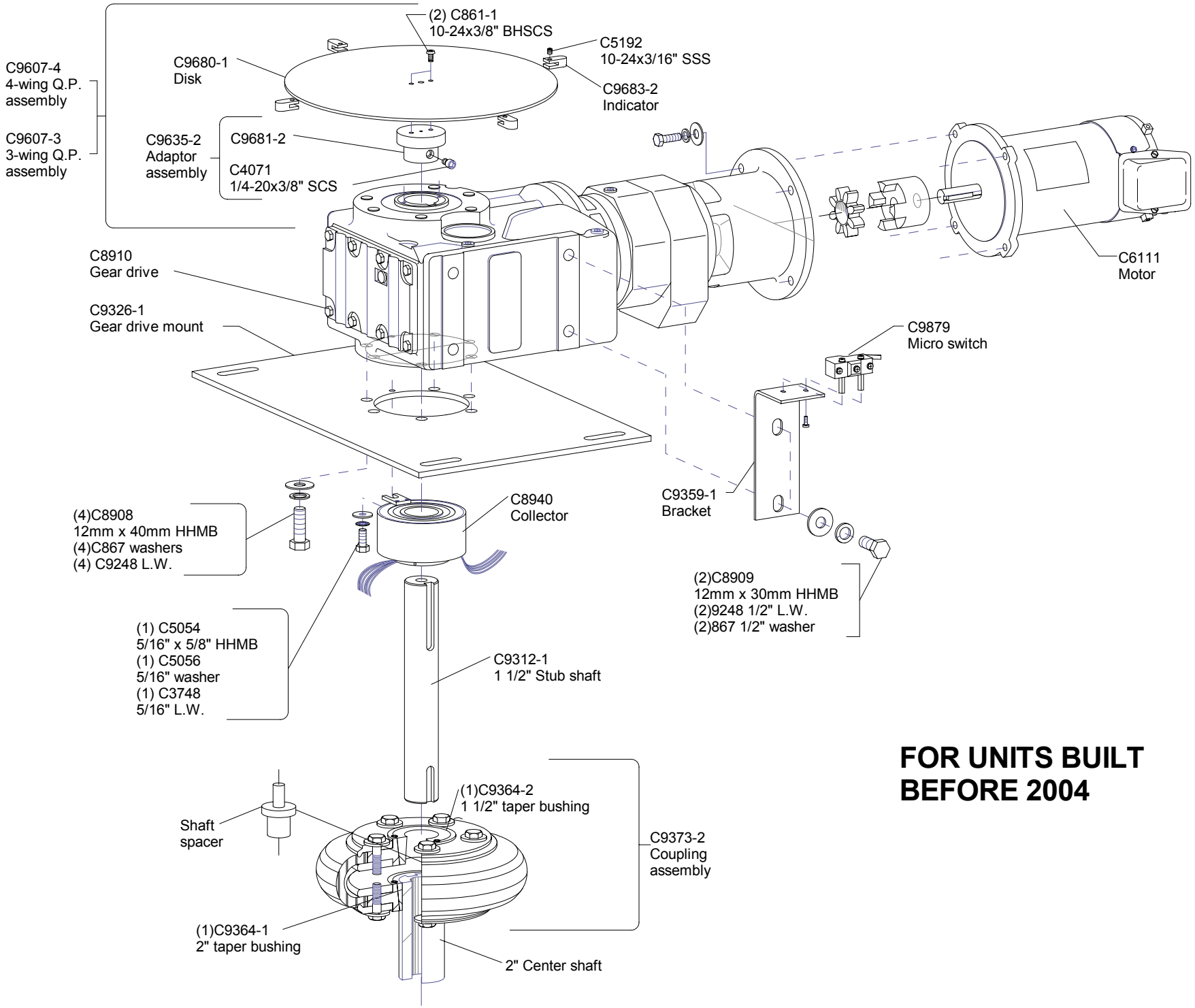

FOR UNITS BUILT BEFORE 2004